http://www.thulearuhaz.hu

Thule System Kit 141

CHEVROLET Lumina Van
OLDSMOBILE Silhouette Van
PONTIAC Trans Sport

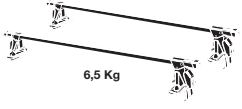

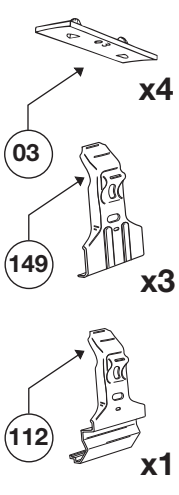

149

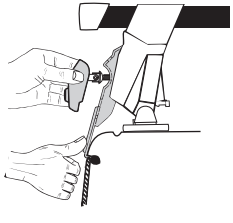

112

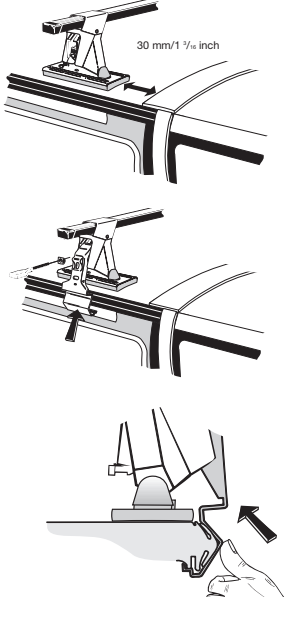

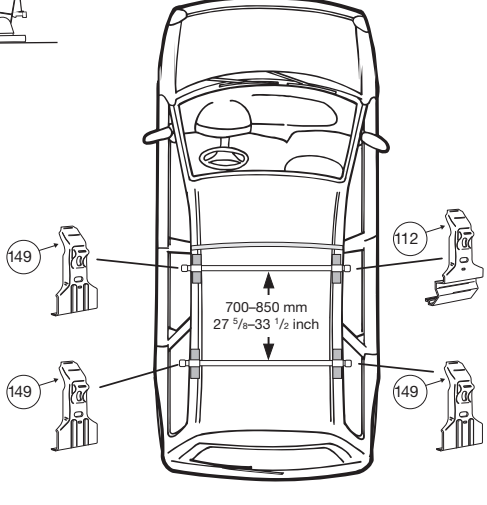

Front	Rear
1210 mm / 47 5/8 inch	1195 mm / 47 1/8 inch